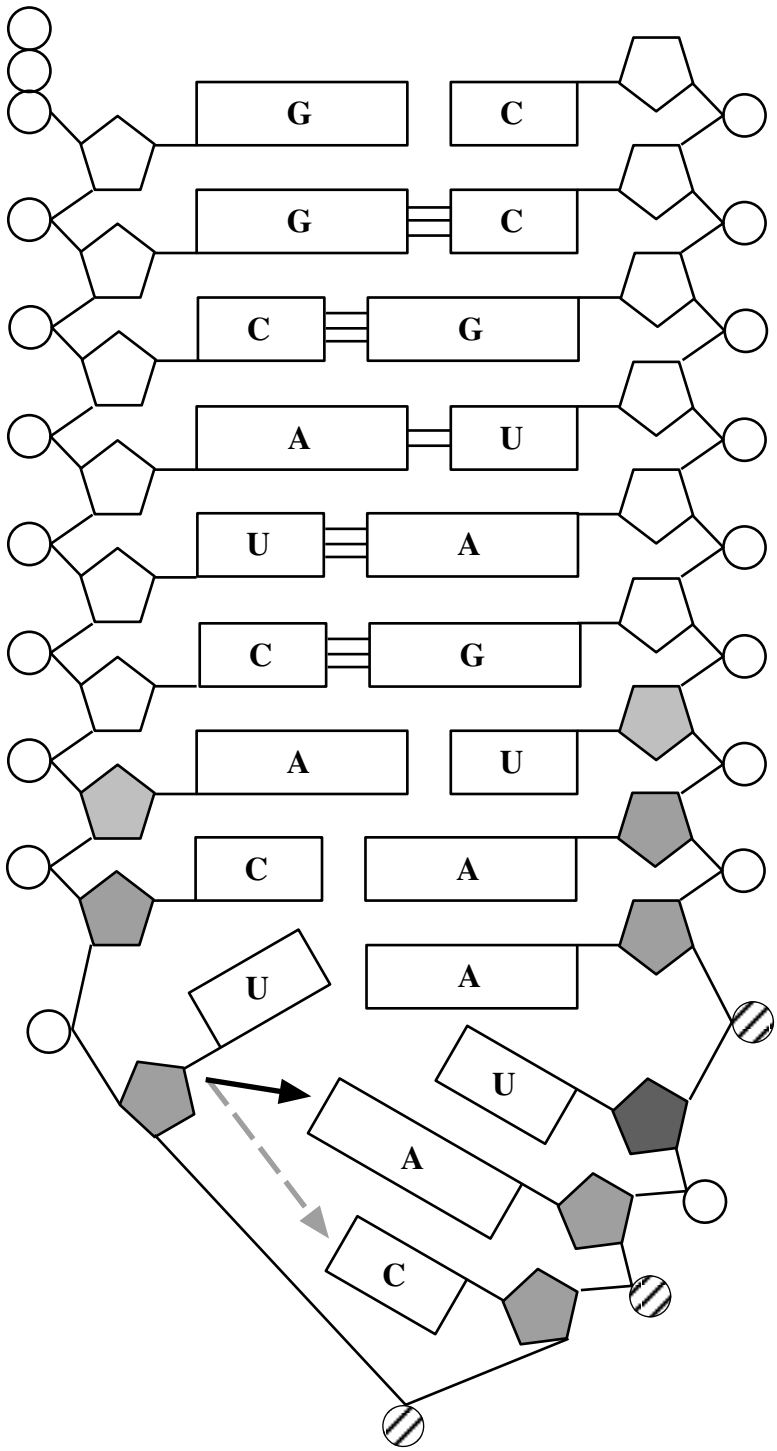

Figure 2.3.13: Qualitative structural features of METAL2. Symbols are as in figure 2.3.9.